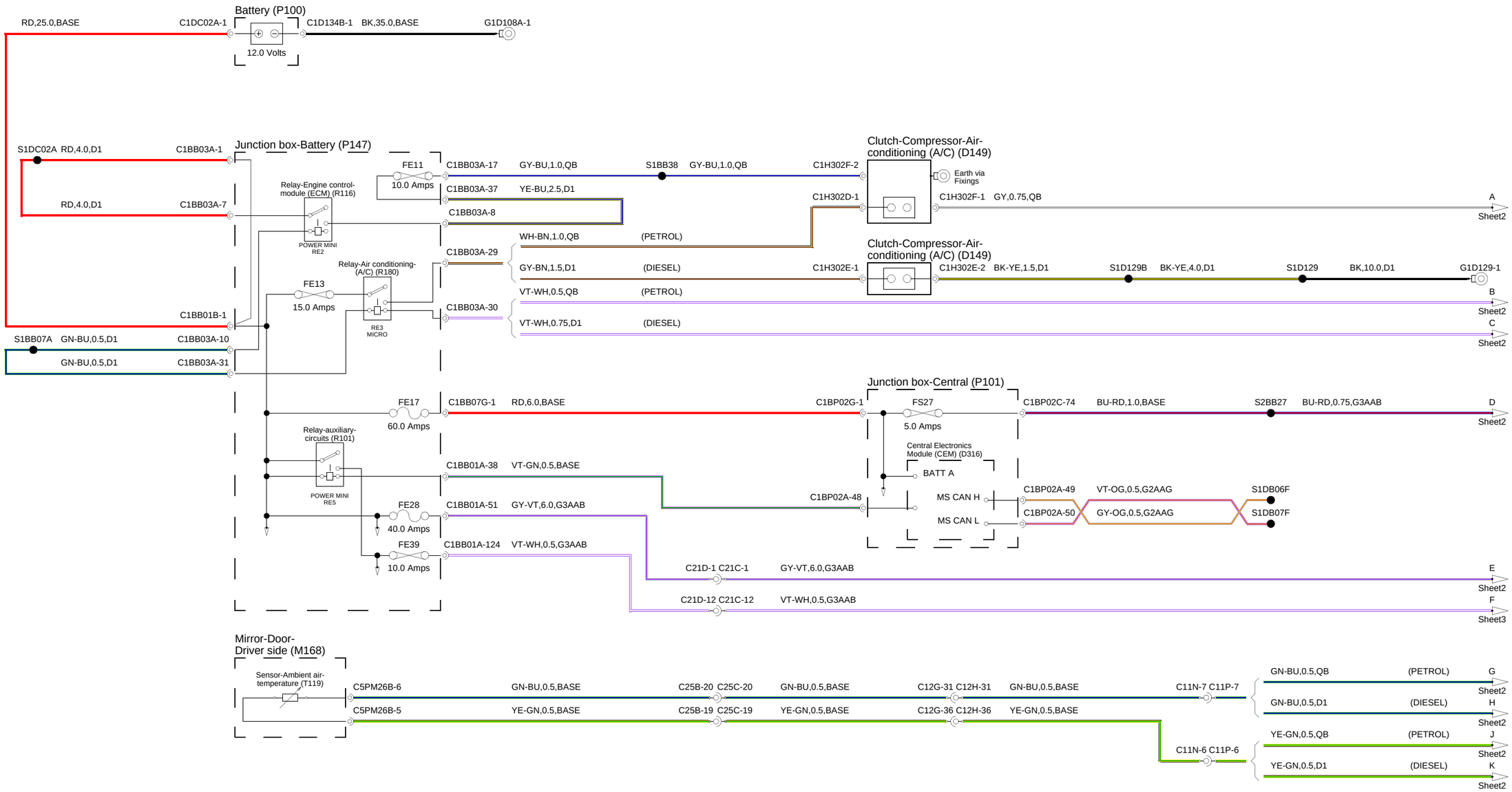
Battery (P100)
RD,25.0,BASE
C1DC02A-1
C1D134B-1
BK,35.0,BASE
G1D108A-1
12.0 Volts
Junction box-Battery (P147)
S1DC02A
RD,4.0,D1
C1BB03A-1
RD,4.0,D1
C1BB03A-7
C1BB01B-1
S1BB07A
GN-BU,0.5,D1
C1BB03A-10
GN-BU,0.5,D1
C1BB03A-31
Relay-Engine control-module (ECM) (R116)
POWER MINI RE2
FE11
10.0 Amps
C1BB03A-17
GY-BU,1.0,QB
S1BB38
GY-BU,1.0,QB
C1H302F-2
C1BB03A-37
YE-BU,2.5,D1
C1BB03A-8
Clutch-Compressor-Air-conditioning (A/C) (D149)
Earth via Fixings
C1H302D-1
C1H302F-1
GY,0.75,QB
A
Sheet2
WH-BN,1.0,QB
(PETROL)
C1BB03A-29
Relay-Air conditioning-(A/C) (R180)
FE13
15.0 Amps
RE3 MICRO
GY-BN,1.5,D1
(DIESEL)
C1H302E-1
Clutch-Compressor-Air-conditioning (A/C) (D149)
C1H302E-2
BK-YE,1.5,D1
S1D129B
BK-YE,4.0,D1
S1D129
BK,10.0,D1
G1D129-1
VT-WH,0.5,QB
(PETROL)
B
Sheet2
C1BB03A-30
VT-WH,0.75,D1
(DIESEL)
C
Sheet2
Junction box-Central (P101)
FE17
60.0 Amps
C1BB07G-1
RD,6.0,BASE
C1BP02G-1
FS27
5.0 Amps
C1BP02C-74
BU-RD,1.0,BASE
S2BB27
BU-RD,0.75,G3AAB
D
Sheet2
Relay-auxiliary-circuits (R101)
POWER MINI RE5
C1BB01A-38
VT-GN,0.5,BASE
Central Electronics Module (CEM) (D316)
BATT A
C1BP02A-48
MS CAN H
MS CAN L
C1BP02A-49
VT-OG,0.5,G2AAG
S1DB06F
C1BP02A-50
GY-OG,0.5,G2AAG
S1DB07F
FE28
40.0 Amps
C1BB01A-51
GY-VT,6.0,G3AAB
FE39
10.0 Amps
C1BB01A-124
VT-WH,0.5,G3AAB
C21D-1 C21C-1
GY-VT,6.0,G3AAB
E
Sheet2
C21D-12 C21C-12
VT-WH,0.5,G3AAB
F
Sheet3
Mirror-Door-Driver side (M168)
Sensor-Ambient air-temperature (T119)
C5PM26B-6
GN-BU,0.5,BASE
C25B-20 C25C-20
GN-BU,0.5,BASE
C12G-31 C12H-31
GN-BU,0.5,BASE
C11N-7 C11P-7
C5PM26B-5
YE-GN,0.5,BASE
C25B-19 C25C-19
YE-GN,0.5,BASE
C12G-36 C12H-36
YE-GN,0.5,BASE
C11N-6 C11P-6
GN-BU,0.5,QB
(PETROL)
G
Sheet2
GN-BU,0.5,D1
(DIESEL)
H
Sheet2
YE-GN,0.5,QB
(PETROL)
J
Sheet2
YE-GN,0.5,D1
(DIESEL)
K
Sheet2

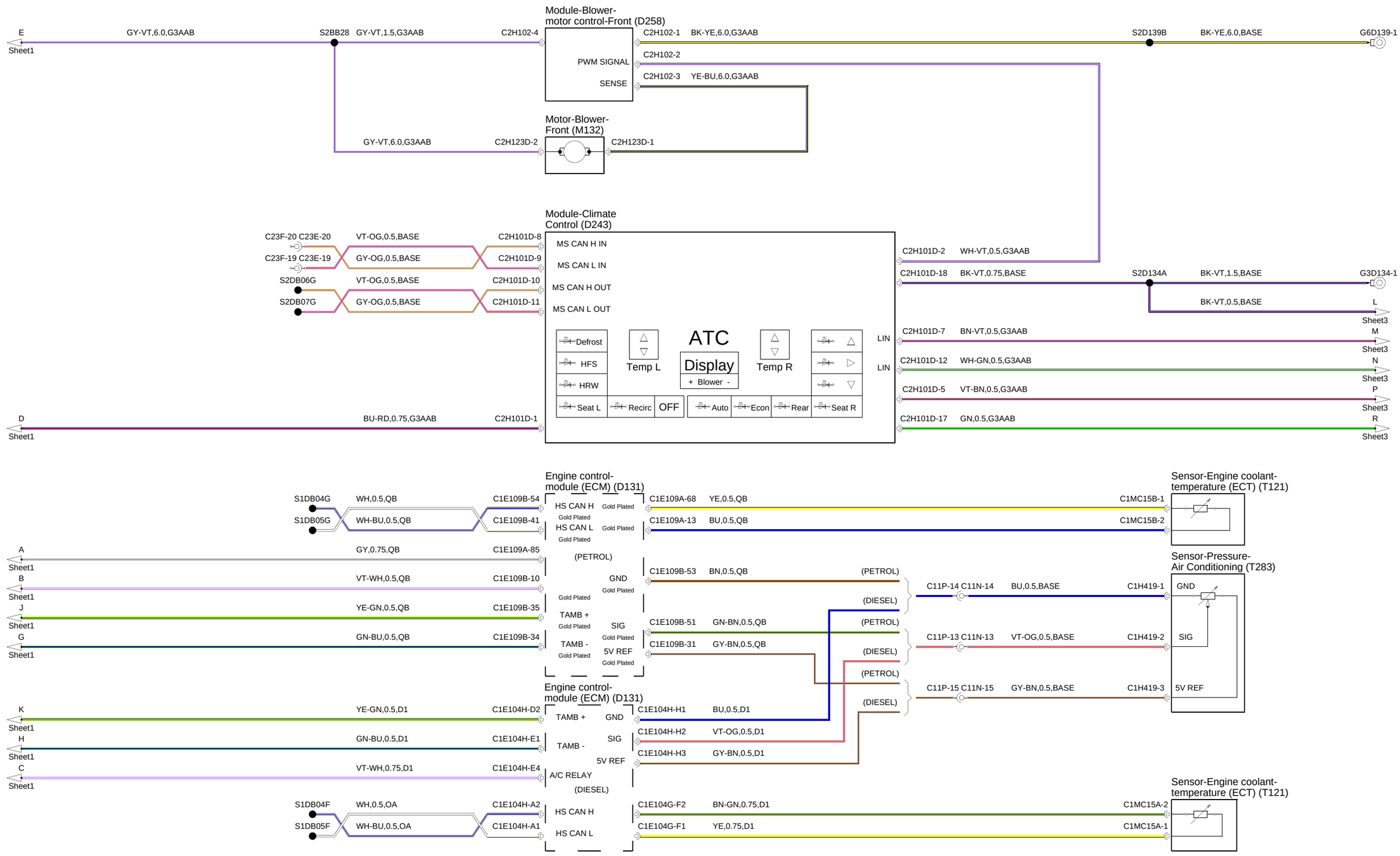
Module-Blower-motor control-Front (D258)
PWM SIGNAL
SENSE
C2H102-1
C2H102-2
C2H102-3
BK-YE,6.0,G3AAB
YE-BU,6.0,G3AAB
S2D139B
BK-YE,6.0,BASE
G6D139-1
E
Sheet1
GY-VT,6.0,G3AAB
S2BB28
GY-VT,1.5,G3AAB
C2H102-4
Motor-Blower-Front (M132)
GY-VT,6.0,G3AAB
C2H123D-2
C2H123D-1
Module-Climate Control (D243)
MS CAN H IN
MS CAN L IN
MS CAN H OUT
MS CAN L OUT
C23F-20 C23E-20
C23F-19 C23E-19
S2DB06G
S2DB07G
VT-OG,0.5,BASE
GY-OG,0.5,BASE
C2H101D-8
C2H101D-9
C2H101D-10
C2H101D-11
C2H101D-2
WH-VT,0.5,G3AAB
C2H101D-18
BK-VT,0.75,BASE
S2D134A
BK-VT,1.5,BASE
G3D134-1
BK-VT,0.5,BASE
L
Sheet3
C2H101D-7
BN-VT,0.5,G3AAB
M
C2H101D-12
WH-GN,0.5,G3AAB
N
C2H101D-5
VT-BN,0.5,G3AAB
P
C2H101D-17
GN,0.5,G3AAB
R
LIN
Defrost
HFS
HRW
Seat L
Recirc
OFF
Auto
Econ
Rear
Seat R
Temp L
ATC
Display
+ Blower -
Temp R
D
BU-RD,0.75,G3AAB
C2H101D-1
Engine control-module (ECM) (D131)
HS CAN H
HS CAN L
Gold Plated
S1DB04G
S1DB05G
WH,0.5,QB
WH-BU,0.5,QB
C1E109B-54
C1E109B-41
C1E109A-68
YE,0.5,QB
C1E109A-13
BU,0.5,QB
C1MC15B-1
C1MC15B-2
Sensor-Engine coolant-temperature (ECT) (T121)
A
GY,0.75,QB
C1E109A-85
(PETROL)
B
VT-WH,0.5,QB
C1E109B-10
GND
J
YE-GN,0.5,QB
C1E109B-35
TAMB +
G
GN-BU,0.5,QB
C1E109B-34
TAMB -
SIG
5V REF
C1E109B-53
BN,0.5,QB
C1E109B-51
GN-BN,0.5,QB
C1E109B-31
GY-BN,0.5,QB
(DIESEL)
C11P-14 C11N-14
BU,0.5,BASE
C11P-13 C11N-13
VT-OG,0.5,BASE
C11P-15 C11N-15
GY-BN,0.5,BASE
C1H419-1
C1H419-2
C1H419-3
Sensor-Pressure-Air Conditioning (T283)
GND
SIG
5V REF
Engine control-module (ECM) (D131)
K
YE-GN,0.5,D1
C1E104H-D2
C1E104H-H1
BU,0.5,D1
H
GN-BU,0.5,D1
C1E104H-E1
C1E104H-H2
VT-OG,0.5,D1
C
VT-WH,0.75,D1
C1E104H-E4
C1E104H-H3
GY-BN,0.5,D1
A/C RELAY
S1DB04F
S1DB05F
WH,0.5,OA
WH-BU,0.5,OA
C1E104H-A2
C1E104H-A1
C1E104G-F2
BN-GN,0.75,D1
C1E104G-F1
YE,0.75,D1
C1MC15A-2
C1MC15A-1
Sensor-Engine coolant-temperature (ECT) (T121)

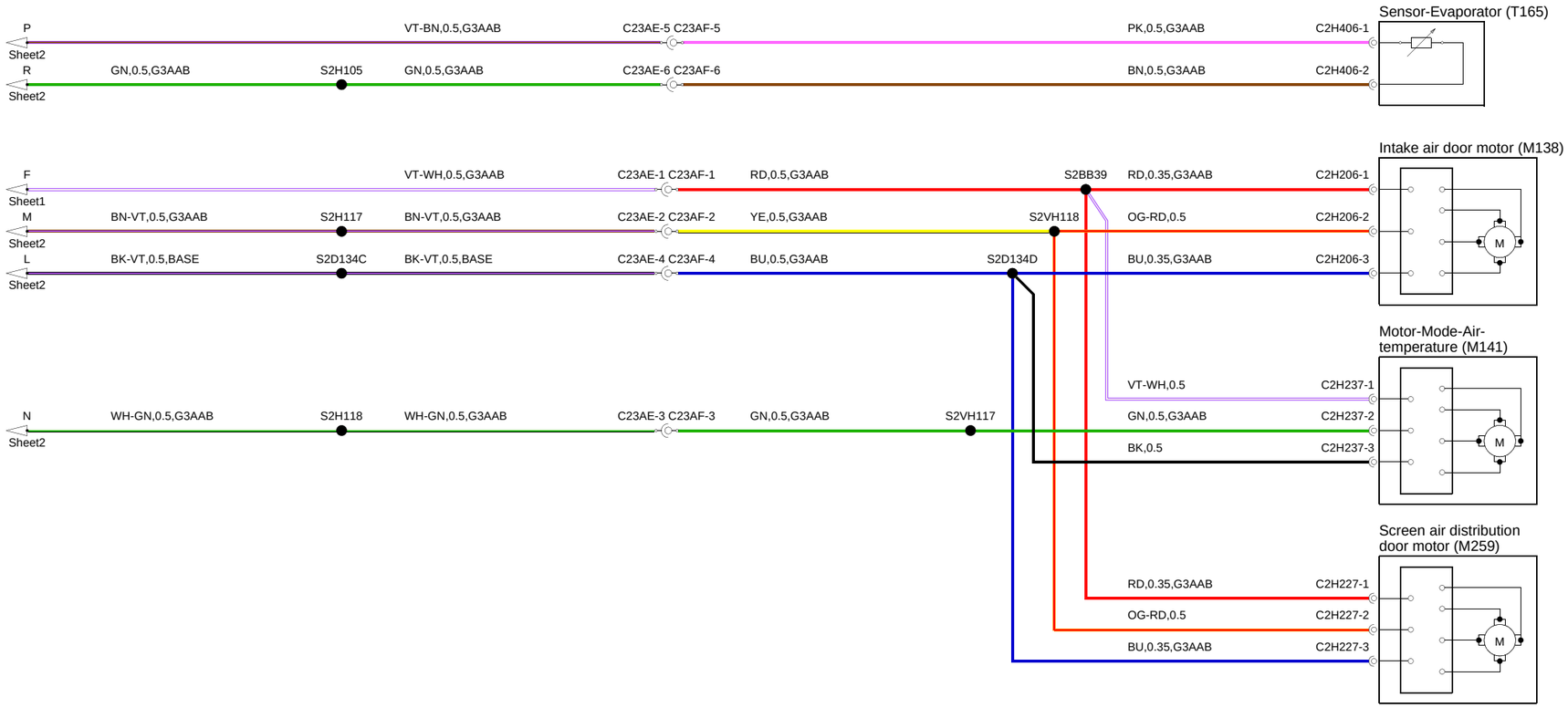
Sensor-Evaporator (T165)
P
Sheet2
VT-BN,0.5,G3AAB
C23AE-5 C23AF-5
PK,0.5,G3AAB
C2H406-1
R
Sheet2
GN,0.5,G3AAB
S2H105
GN,0.5,G3AAB
C23AE-6 C23AF-6
BN,0.5,G3AAB
C2H406-2
Intake air door motor (M138)
F
Sheet1
VT-WH,0.5,G3AAB
C23AE-1 C23AF-1
RD,0.5,G3AAB
S2BB39
RD,0.35,G3AAB
C2H206-1
M
Sheet2
BN-VT,0.5,G3AAB
S2H117
BN-VT,0.5,G3AAB
C23AE-2 C23AF-2
YE,0.5,G3AAB
S2VH118
OG-RD,0.5
C2H206-2
L
Sheet2
BK-VT,0.5,BASE
S2D134C
BK-VT,0.5,BASE
C23AE-4 C23AF-4
BU,0.5,G3AAB
S2D134D
BU,0.35,G3AAB
C2H206-3
M
Motor-Mode-Air-temperature (M141)
VT-WH,0.5
C2H237-1
N
Sheet2
WH-GN,0.5,G3AAB
S2H118
WH-GN,0.5,G3AAB
C23AE-3 C23AF-3
GN,0.5,G3AAB
S2VH117
GN,0.5,G3AAB
C2H237-2
BK,0.5
C2H237-3
M
Screen air distribution door motor (M259)
RD,0.35,G3AAB
C2H227-1
OG-RD,0.5
C2H227-2
BU,0.35,G3AAB
C2H227-3
M

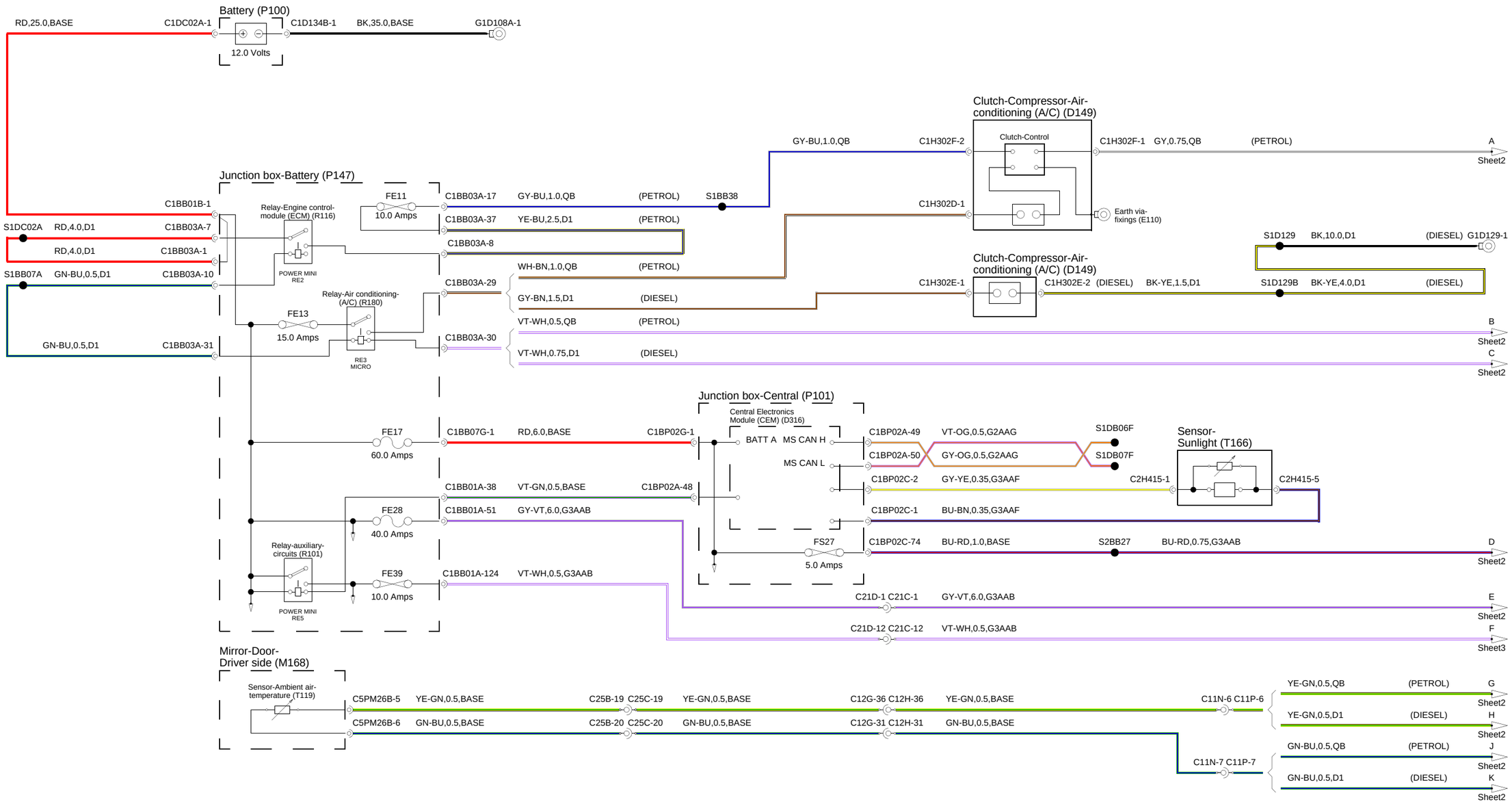
Battery (P100)
RD,25.0,BASE
C1DC02A-1
C1D134B-1
BK,35.0,BASE
G1D108A-1
12.0 Volts
Clutch-Compressor-Air-conditioning (A/C) (D149)
Clutch-Control
GY-BU,1.0,QB
C1H302F-2
C1H302F-1
GY,0.75,QB
(PETROL)
A
Sheet2
C1H302D-1
Earth via-fixings (E110)
Junction box-Battery (P147)
C1BB01B-1
Relay-Engine control-module (ECM) (R116)
FE11
10.0 Amps
C1BB03A-17
GY-BU,1.0,QB
(PETROL)
S1BB38
S1DC02A
RD,4.0,D1
C1BB03A-7
C1BB03A-37
YE-BU,2.5,D1
(PETROL)
RD,4.0,D1
C1BB03A-1
C1BB03A-8
POWER MINI RE2
S1BB07A
GN-BU,0.5,D1
C1BB03A-10
WH-BN,1.0,QB
(PETROL)
S1D129
BK,10.0,D1
(DIESEL)
G1D129-1
Clutch-Compressor-Air-conditioning (A/C) (D149)
C1H302E-1
C1H302E-2
(DIESEL)
BK-YE,1.5,D1
S1D129B
BK-YE,4.0,D1
(DIESEL)
C1BB03A-29
GY-BN,1.5,D1
(DIESEL)
Relay-Air conditioning-(A/C) (R180)
FE13
15.0 Amps
RE3 MICRO
VT-WH,0.5,QB
(PETROL)
B
Sheet2
C1BB03A-30
VT-WH,0.75,D1
(DIESEL)
C
Sheet2
GN-BU,0.5,D1
C1BB03A-31
Junction box-Central (P101)
Central Electronics Module (CEM) (D316)
FE17
60.0 Amps
C1BB07G-1
RD,6.0,BASE
C1BP02G-1
BATT A
MS CAN H
C1BP02A-49
VT-OG,0.5,G2AAG
S1DB06F
MS CAN L
C1BP02A-50
GY-OG,0.5,G2AAG
S1DB07F
Sensor-Sunlight (T166)
C1BP02C-2
GY-YE,0.35,G3AAF
C2H415-1
C2H415-5
C1BB01A-38
VT-GN,0.5,BASE
C1BP02A-48
FE28
40.0 Amps
C1BB01A-51
GY-VT,6.0,G3AAB
C1BP02C-1
BU-BN,0.35,G3AAF
Relay-auxiliary-circuits (R101)
FS27
5.0 Amps
C1BP02C-74
BU-RD,1.0,BASE
S2BB27
BU-RD,0.75,G3AAB
D
Sheet2
FE39
10.0 Amps
C1BB01A-124
VT-WH,0.5,G3AAB
POWER MINI RE5
C21D-1 C21C-1
GY-VT,6.0,G3AAB
E
Sheet2
C21D-12 C21C-12
VT-WH,0.5,G3AAB
F
Sheet3
Mirror-Door-Driver side (M168)
Sensor-Ambient air-temperature (T119)
C5PM26B-5
YE-GN,0.5,BASE
C25B-19 C25C-19
YE-GN,0.5,BASE
C12G-36 C12H-36
YE-GN,0.5,BASE
C11N-6 C11P-6
YE-GN,0.5,QB
(PETROL)
G
Sheet2
YE-GN,0.5,D1
(DIESEL)
H
Sheet2
C5PM26B-6
GN-BU,0.5,BASE
C25B-20 C25C-20
GN-BU,0.5,BASE
C12G-31 C12H-31
GN-BU,0.5,BASE
GN-BU,0.5,QB
(PETROL)
J
Sheet2
C11N-7 C11P-7
GN-BU,0.5,D1
(DIESEL)
K
Sheet2

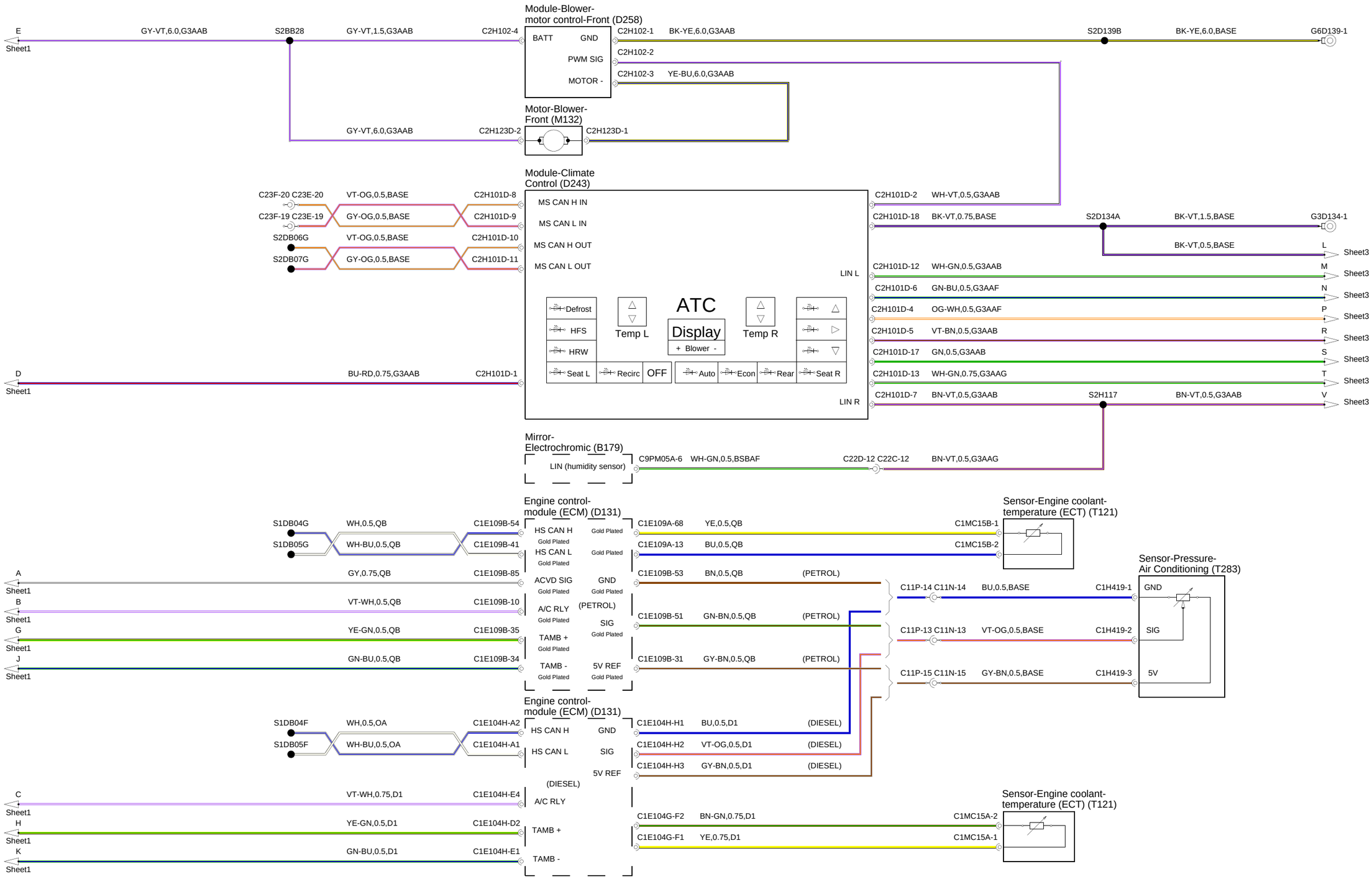
Module-Blower-motor control-Front (D258)
BATT
GND
PWM SIG
MOTOR -
E
Sheet1
GY-VT,6.0,G3AAB
S2BB28
GY-VT,1.5,G3AAB
C2H102-4
C2H102-1
BK-YE,6.0,G3AAB
S2D139B
BK-YE,6.0,BASE
G6D139-1
C2H102-2
C2H102-3
YE-BU,6.0,G3AAB
Motor-Blower-Front (M132)
GY-VT,6.0,G3AAB
C2H123D-2
C2H123D-1
Module-Climate Control (D243)
MS CAN H IN
MS CAN L IN
MS CAN H OUT
MS CAN L OUT
LIN L
LIN R
ATC
Display
+ Blower -
Defrost
HFS
HRW
Seat L
Recirc
OFF
Auto
Econ
Rear
Seat R
Temp L
Temp R
C23F-20 C23E-20
VT-OG,0.5,BASE
C2H101D-8
C23F-19 C23E-19
GY-OG,0.5,BASE
C2H101D-9
S2DB06G
VT-OG,0.5,BASE
C2H101D-10
S2DB07G
GY-OG,0.5,BASE
C2H101D-11
C2H101D-2
WH-VT,0.5,G3AAB
C2H101D-18
BK-VT,0.75,BASE
S2D134A
BK-VT,1.5,BASE
G3D134-1
BK-VT,0.5,BASE
L
Sheet3
C2H101D-12
WH-GN,0.5,G3AAB
M
C2H101D-6
GN-BU,0.5,G3AAF
N
C2H101D-4
OG-WH,0.5,G3AAF
P
C2H101D-5
VT-BN,0.5,G3AAB
R
C2H101D-17
GN,0.5,G3AAB
S
C2H101D-13
WH-GN,0.75,G3AAG
T
C2H101D-7
BN-VT,0.5,G3AAB
S2H117
BN-VT,0.5,G3AAB
V
D
Sheet1
BU-RD,0.75,G3AAB
C2H101D-1
Mirror-Electrochromic (B179)
LIN (humidity sensor)
C9PM05A-6
WH-GN,0.5,BSBAF
C22D-12 C22C-12
BN-VT,0.5,G3AAG
Engine control-module (ECM) (D131)
S1DB04G
WH,0.5,QB
C1E109B-54
S1DB05G
WH-BU,0.5,QB
C1E109B-41
HS CAN H
Gold Plated
HS CAN L
C1E109A-68
YE,0.5,QB
C1E109A-13
BU,0.5,QB
Sensor-Engine coolant-temperature (ECT) (T121)
C1MC15B-1
C1MC15B-2
A
Sheet1
GY,0.75,QB
C1E109B-85
ACVD SIG
GND
C1E109B-53
BN,0.5,QB
(PETROL)
B
VT-WH,0.5,QB
C1E109B-10
A/C RLY
C1E109B-51
GN-BN,0.5,QB
SIG
G
YE-GN,0.5,QB
C1E109B-35
TAMB +
J
GN-BU,0.5,QB
C1E109B-34
TAMB -
5V REF
C1E109B-31
GY-BN,0.5,QB
C11P-14 C11N-14
BU,0.5,BASE
C1H419-1
Sensor-Pressure-Air Conditioning (T283)
GND
C11P-13 C11N-13
VT-OG,0.5,BASE
C1H419-2
SIG
C11P-15 C11N-15
GY-BN,0.5,BASE
C1H419-3
5V
Engine control-module (ECM) (D131)
S1DB04F
WH,0.5,OA
C1E104H-A2
S1DB05F
WH-BU,0.5,OA
C1E104H-A1
HS CAN H
HS CAN L
GND
SIG
5V REF
C1E104H-H1
BU,0.5,D1
(DIESEL)
C1E104H-H2
VT-OG,0.5,D1
C1E104H-H3
GY-BN,0.5,D1
C
Sheet1
VT-WH,0.75,D1
C1E104H-E4
A/C RLY
H
YE-GN,0.5,D1
C1E104H-D2
TAMB +
K
GN-BU,0.5,D1
C1E104H-E1
TAMB -
C1E104G-F2
BN-GN,0.75,D1
C1MC15A-2
C1E104G-F1
YE,0.75,D1
C1MC15A-1

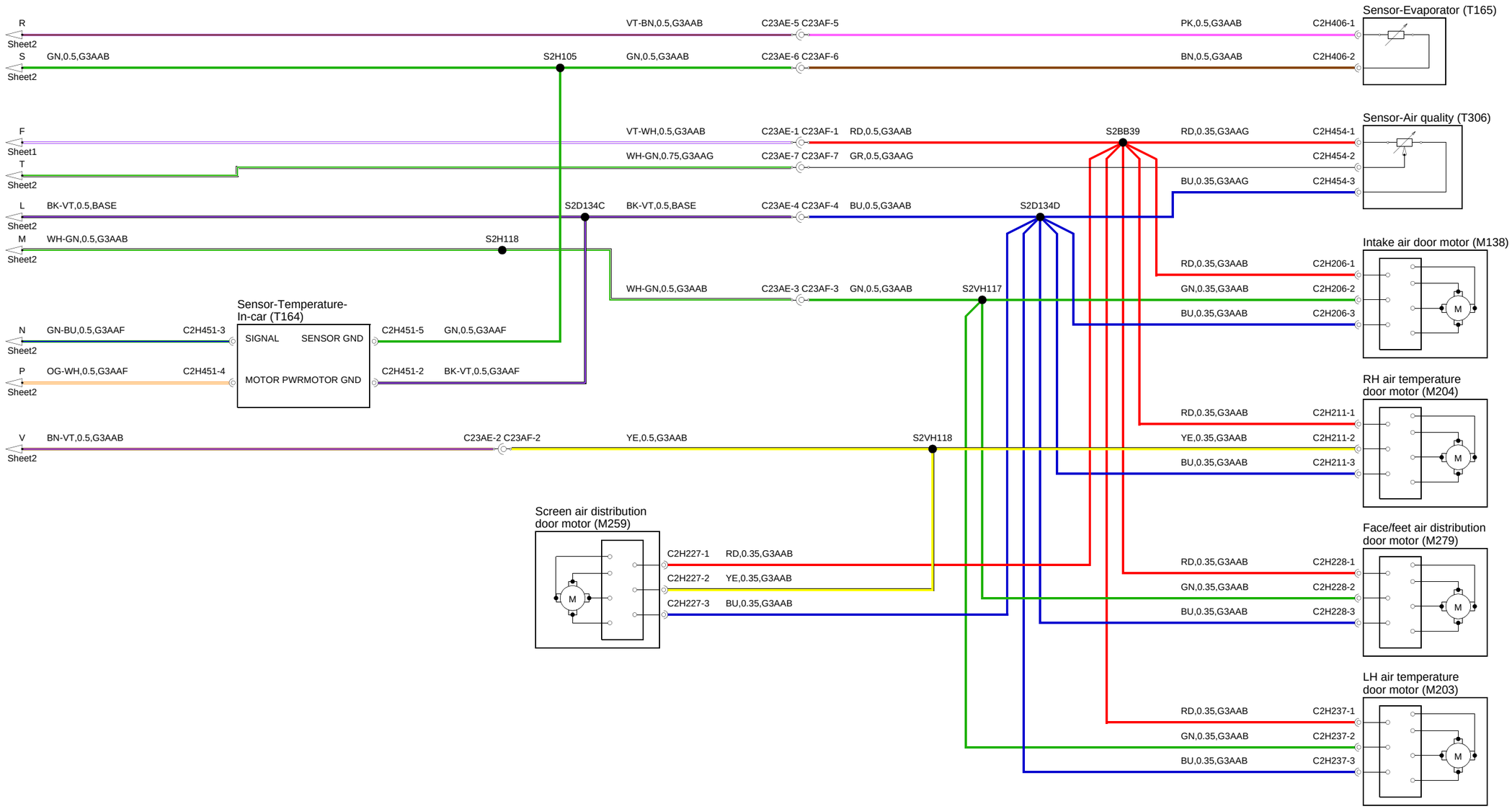
R
Sheet2
S
Sheet2
GN,0.5,G3AAB
S2H105
VT-BN,0.5,G3AAB
C23AE-5 C23AF-5
GN,0.5,G3AAB
C23AE-6 C23AF-6
PK,0.5,G3AAB
C2H406-1
BN,0.5,G3AAB
C2H406-2
Sensor-Evaporator (T165)
F
Sheet1
T
Sheet2
VT-WH,0.5,G3AAB
C23AE-1 C23AF-1
RD,0.5,G3AAB
S2BB39
RD,0.35,G3AAG
C2H454-1
WH-GN,0.75,G3AAG
C23AE-7 C23AF-7
GR,0.5,G3AAG
C2H454-2
BU,0.35,G3AAG
C2H454-3
Sensor-Air quality (T306)
L
Sheet2
BK-VT,0.5,BASE
S2D134C
BK-VT,0.5,BASE
C23AE-4 C23AF-4
BU,0.5,G3AAB
S2D134D
M
Sheet2
WH-GN,0.5,G3AAB
S2H118
WH-GN,0.5,G3AAB
C23AE-3 C23AF-3
GN,0.5,G3AAB
S2VH117
RD,0.35,G3AAB
C2H206-1
GN,0.35,G3AAB
C2H206-2
BU,0.35,G3AAB
C2H206-3
Intake air door motor (M138)
Sensor-Temperature-
In-car (T164)
N
Sheet2
GN-BU,0.5,G3AAF
C2H451-3
SIGNAL
SENSOR GND
C2H451-5
GN,0.5,G3AAF
P
Sheet2
OG-WH,0.5,G3AAF
C2H451-4
MOTOR PWR
MOTOR GND
C2H451-2
BK-VT,0.5,G3AAF
V
Sheet2
BN-VT,0.5,G3AAB
C23AE-2 C23AF-2
YE,0.5,G3AAB
S2VH118
RD,0.35,G3AAB
C2H211-1
YE,0.35,G3AAB
C2H211-2
BU,0.35,G3AAB
C2H211-3
RH air temperature
door motor (M204)
Screen air distribution
door motor (M259)
C2H227-1
RD,0.35,G3AAB
C2H227-2
YE,0.35,G3AAB
C2H227-3
BU,0.35,G3AAB
RD,0.35,G3AAB
C2H228-1
GN,0.35,G3AAB
C2H228-2
BU,0.35,G3AAB
C2H228-3
Face/feet air distribution
door motor (M279)
RD,0.35,G3AAB
C2H237-1
GN,0.35,G3AAB
C2H237-2
BU,0.35,G3AAB
C2H237-3
LH air temperature
door motor (M203)